MULE PRO-MX™

The MULE PRO-MX™ is Kawasaki's mid-size multi-task MULE Side x Side that's up for any weekend adventure or completing chores at home. It has the ride comfort, performance and handling that make it a MULE PRO, while its robust cargo capacity will handle a variety of work needs.

SUPER BLACK
(KAF700CMFNN, EPS/LE)

COLORS

MODEL SHOWN with ACCESSORIES

KEY FEATURES

- *POWERFUL 695CC ENGINE*
- *WIDE STANCE AND LONG WHEELBASE CONTRIBUTE TO COMFORTABLE, CONFIDENCE-INSPIRING RIDE*
- *700 POUND CARGO BED CAPACITY*
- *CENTRIFUGAL CLUTCH PROVIDES SMOOTH ACCELERATION AND TRUE ENGINE BRAKING*
- *BUILT TO "KAWASAKI STRONG" STANDARDS WITH A 3–YEAR LIMITED WARRANTY*

* ™/®& ©2018 TrueTimber Outdoors Holding Company, LLC. Manufactured and/or distributed under official license by Kawasaki Motors Corp., U.S.A.

SPECIFICATIONS — KAF700BMFNN/CMFNN/DMFNN

Engine Type	4-Stroke, Fuel Injected Single Cylinder, Liquid-Cooled, SOHC
Displacement	695cc
Bore & Stroke	102.0 x 85.0 mm
Maximum Torque	42.7 lb-ft @ 5,000 rpm
Starting	Electric
Transmission	Continuously Variable Transmission (CVT), H/L/N/R
Final Drive	Selectable 2WD/4WD, Shaft, Dual mode rear differential with lock
Front Tire Size	Duro Frontier Radial Tubeless 25 x 8-12
Rear Tire Size	Duro Frontier Radial Tubeless 25 x 10-12
Wheelbase	78.9 in.
Turning Radius (Differential Unlocked)	13.8 ft.
Brakes, Front and Rear	Hydraulic Disc
Front Suspension Type	Double Wishbone
Rear Suspension Type	Double Wishbone
Ground Clearance	10.6 in.
Fuel Tank Capacity	9.5 gal.
Track Front/Rear	52.0 in. / 50.6 in.
Towing Capacity	1,500 lb.
Vehicle Load Capacity	1,200 lb.
Overall Length x Width x Height	110.0 x 60.0 x 74.4 (75.8 LE, Camo) in.
Bed Length x Width x Height	33.4 x 44.1 x 9.1 in.
Bed Load Capacity	700 lb.††
Seating Capacity	2
Maximum Alternator Ouput	35.7 amps @ 5,000 rpm
Curb Weight†	1,587.6 (BMFNN)/1,594.2 (CMFNN)/1,598.6 (DMFNN) lb.
Warranty	Kawasaki Strong 3-Year Limited Warranty
Kawasaki Protection Plus™	12, 24, or 36 months

Specifications subject to change without notice.
(KP) = See Kaw-Pedia section for more details.
* = Changes from previous model year.
† = Includes all necessary materials and fluids to operate correctly, full tank of fuel (more than 90% of capacity) and tool kit (if supplied).
†† = "L" (California) Model 600 lb.

2021 | MULE PRO-MX™ SERIES VARIATIONS

MODEL / Feature	KAF700B (EPS)	KAF700C (EPS LE)	KAF700D (EPS CAMO)
EPS	■	■	■
Tilt Steering	■	■	■
Roof, plastic	—	■	■
Wheels	Steel	Aluminium	Steel
2x Halogen Headlamps	■	■	■
2x LED Auxiliary Headlamps	■	■	■

ENGINE

- Liquid-cooled, SOHC, 4-valve, fuel-injected, single cylinder engine pumps out superb power and torque for a wide range of uses.
- Ample low-end torque contributes to smooth, responsive power at low speed, contributing to easy throttle control and excellent low-speed maneuverability.
- Air intake is located high up under the dashboard. Intake air travels through a sealed labyrinth layout and efficient paper filter to prevent any dust from reaching the engine.
- Stainless steel exhaust system for high durability.

FUEL INJECTION SYSTEM

- The fuel injection system monitors coolant temperature, air intake temperature, throttle position, air intake pressure, vehicle speed and crankshaft angle and automatically meters the ideal amount of fuel for extremely stable power delivery – regardless of the conditions. The system automatically adjusts for changes in altitude, idle adjustments are unnecessary, and starting is hassle-free.
- Fuel delivery is instantaneous through the 44mm throttle body, contributing to predictable throttle response for smooth control.
- Helps provide easy starting in various conditions

MODEL SHOWN with ACCESSORIES

TRANSMISSION

Continuously Variable Transmission (CVT)

- Fully automatic for ease of use.
- CVT tuned to provide engine braking regardless of engine RPM.
- Utilizes a centrifugal clutch that helps provide precise control of power, smooth acceleration and reduces strain on the CVT belt since it is always in tension with the drive sheaves.
- Keeps engine rpm in most efficient range for selected vehicle speed, load or terrain.
- CVT transmission has very smooth response, adding to ease of control.
- Tuned to provide engine braking when descending hills.
- N7-grade CVT belt is highly durable.
- CVT drive and driven shafts are both hard chrome plated for long-lasting durability.
- CVT air cooling duct designed to prevent water from entering the CVT.

Electrically Selectable 4WD & Rear Differential Lock

- Electrically selectable 2WD/4WD and dual-mode rear differential system allow easy changes between drive systems to suit changing terrain and applications.
- Flipping the switches causes the systems to be engaged instantly, ensuring the driver has full control of 4WD or rear differential lock activation.
- Dual-mode rear differential provides maximum traction when in locked mode and minimizes ground disturbance when unlocked.

CHASSIS

Shinari-Tuned Frame

- Shinari is a Japanese term that describes the elasticity that enables an object to bend without breaking and return to its original shape – similar to how a hunting bow or fishing pole behaves. Tuned for the ideal shinari characteristics, the MULE PRO-MX's rugged frame construction benefits not only durability, but handling and ride comfort as well.
- The frame features a ladder-type construction and is built from square tubes of high-quality steel. Frame components are joined together using a combination of welds and bolts to achieve highly predictable chassis performance and high durability.
- High-tensile steel used for high-load areas like the suspension mounting plates.
- Utilizing extensive stiffness balance testing, the frame was designed to offer a good balance between lateral and torsional stiffness. This shinari tuning delivers high durability while allowing just the right amount of chassis flex to be able to handle the shocks of off-road driving to help provide a high level of ride comfort.
- Fully rubber-mounted engine helps keep engine vibration to a minimum.
- Like the larger MULE PRO Series models, the MULE PRO-MX chassis design positions the wheels as close to the corners of the vehicle as possible, which contributes to overall handling performance and minimizes overhang.
- Wide track contributes to vehicle performance.
- Optimized wheelbase contributes to a relatively tight turning radius, which makes it easier to maneuver in close confines.
- The MULE PRO-MX's wheelbase and generous ground clearance result in a favorable 16° breakover angle, which reduces the chance of bottoming out when cresting a ridge or riding over a fallen log.
- High approach and departure angles (67° and 63°, respectively) also contribute to the MULE PRO-MX's off-road performance. Minimizing bodywork overhang by positioning the wheels as close to the bumpers as possible reduces the chance of hitting the bumper or scraping the tail when going up or coming down steep slopes.

Double-Wishbone Suspension

- Double-wishbone suspension is used both front and rear to enable each wheel to drive over obstacles with minimum effect on the chassis.
- Complementing the flex of the shinari-tuned chassis, twin-tube shock absorbers provide excellent bump absorption and rough road performance.
- Suspension settings were chosen for ride comfort and to minimize chassis body roll to help provide a smoother ride for passengers.

CHASSIS CONTINUED

4-wheel Disc Brakes

- Front and rear disc brakes provide strong, sure stopping power, especially when combined with the engine braking. The hydraulic disc system offers predictable performance, delivering brake power that matches input at the brake pedal.
- Front discs measure 212mm and are gripped by twin-piston calipers, while the 212mm rear discs are clamped by single-piston calipers.
- A parking brake lever is conveniently located under the dash to the right of the steering wheel and activates the rear brakes to keep the PRO-MX in place when parked. The parking brake can be applied in any gear and is not susceptable to transmission wind-up.

High-Grade Electric Power Steering(KP)

- The electric power steering system (EPS) reduces steering effort, especially at low speeds. Input from a vehicle speed sensor and torque sensor determine the amount of steering assistance required from the system's electric motor. At slow speeds, or when stopped, assistance is greatest. Assistance is reduced as vehicle speed increases. It all adds up to superior handling.
- The EPS system also enhances ride comfort and control by acting as a damping system. The inertia of the electric motor significantly reduces bump steer and kickback to the steering wheel often caused when encountering rocks or ruts.
- Since the system is electric, it works immediately, without the time lag sometimes associated with hydraulic systems that, when the engine is first started, require time to pump engine oil to the power steering system.
- Because the EPS system does not rely on oil pumped from the engine, there is no engine power loss.

CHASSIS CONTINUED

Tilt Steering Wheel

- Steering wheel has a stepless range of approximately 31˚, allowing drivers to set its position to suit their preference, as well as lift it out of the way to facilitate entering and exiting the vehicle.
- Thickly cushioned steering wheel contributes to comfort as well as the high-quality feel of the MULE PRO-MX.

Roomy Interior

- The MULE PRO-MX's wide-body chassis creates a roomy interior space that offers the shoulder and legroom for two adults to comfortably sit side-by-side.
- The dashboard is far forward and low for a more spacious feeling.
- Wheels are moved to the outer corners to allow more foot space.
- Seat material has superb elasticity, offering increased comfort and slip resistance. The material is also resistant to cold, allowing it to maintain its suppleness when temperatures drop and reducing the chance of tearing/ripping when exposed to cold temperatures.
- Passenger handgrip integrated into the ROPS frame contributes to comfort.
- Both seating positions are equipped with a three-point seat belt, with anti-cinch shoulder straps.
- Shoulder guards are integrated into the ROPS frame.

Standard Doors

- Like the MULE PRO Series flagship models, the PRO-MX comes standard with doors, offering a level of mud protection while allowing easy access to the cab.
- Simple latch mechanism makes is easy to open and close the doors.

CHASSIS CONTINUED

Robust Cargo and Towing Capacity

- The cargo bed's flat bottom makes it easy to load from three sides, makes efficient use of space and allows cargo to be easily secured. The highly durable bed is made of diamond-plate steel.
- 6 Tie-Down hooks provide convenient points to secure cargo.
- Gas-assisted tilting cargo bed with prop rod provides quick engine access.
- Cargo bed features a two-lever tailgate release system for easy opening and closing. The tailgate's blow-molded design includes built-in cup holders that come in handy when the tailgate is down.

- The cargo bed walls are designed with slots that can accommodate cargo dividers, allowing cargo to be separated and stowed more securely.

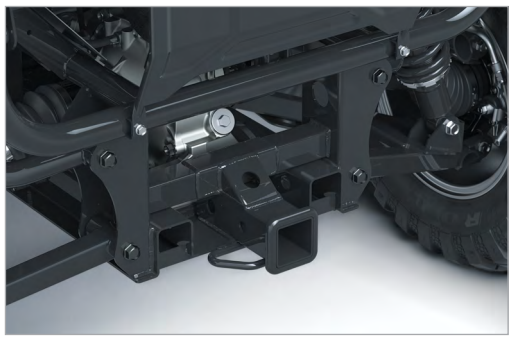

- One-inch square tubing running along the top of the cargo bed side walls provides easy tie-down points for bungee hooks, and is compatible with the accessory Tool Mount System brackets that allow toolbox or other items to be snap-mounted to the cargo bed rails.
- Standard two-inch tow hitch receiver is compatible with a wide range of accessory hitches and allows the MULE PRO-MX to tow up to 1,500 pounds.

Storage

- 9.1 liters of storage are available under the front hood, which also allows quick access to key electrical components like the ECU, plus easy access to the radiator cap.
- 5.3-liter storage bin located under the passenger's seat offers convenient storage. A steel plate protects the storage bin from debris that might get kicked up by the wheels.
- Lockable passenger-side glove box provides enclosed storage for small items.
- Two dashboard pockets and a tray provide a handy place to put small items.

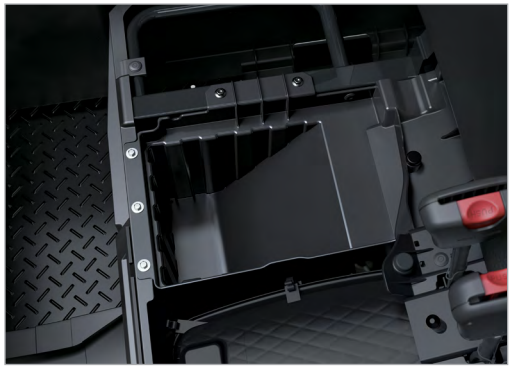

- Two drink holders are built into the bodywork in front of the dashboard.
- DC Socket
- A DC socket integrated into the dashboard provides a power supply (up to 120 W) for accessory items or personal devices.

Tough, Rugged Styling

Designed to reflect their tough construction and capable performance, the MULE PRO-MX models feature new styling inspired by the rugged, no-nonsense design of the MULE PRO Series flagship models.

- The PRO-MX's high-quality pickup truck-style bodywork is inspired by the PRO Series models, but it is the front-end design that really gives it its strong family image. The grille design, functional bumper and guard, and headlamp-area were all inspired by Kawasaki's flagship MULE PRO-FXT™ models.
- Steel front bumper adds to the PRO-MX's tough image.
- The front hood slants down to make it easier to see ahead, contributing to the easy-to-use feeling.
- The backswept design of the paneling around the headlamps is unique to the PRO-MX, and gives it a feeling of motion even when parked.
- Cast aluminium wheels on the EPS LE model have a unique design and contribute to a high-quality image.
- Clean, automotive-style dashboard design includes switches for the lamps, selectable 4WD, and rear differential lock. Four spaces for additional accessory switches are provided.

LE MODEL SHOWN

Compact Quad Headlamps

- Bright, compact 35W outer headlamps are complemented by auxiliary LED inner headlamps. Both have high and low beam and the quadruple headlamps cut a bright path through the dark for excellent visibility on night rides.
- The outer headlamps can be swapped with accessory LED headlamps to give the PRO-MX an even fiercer front face.
- Compact LED brake/taillights are built into the cargo bed side walls

LE MODEL SHOWN

KAWASAKI GENUINE ACCESSORIES PACKAGES

Kawasaki has Accessory Packages available as single part numbers and one value price for the MULE PRO-MX, delivered complete to dealerships. When purchased with the vehicle, extended warranty terms - the same length as the vehicle - on the accessories apply.

Utility Package

Note: Not applicable on MULE PRO-MX™ EPS LE

UTILITY PACKAGE	P/N 99969-3750
DESCRIPTION	
Roof - Plastic	
Dome Light	
Horn	
Rear Bumper	
Rear View Mirror	
Trailer Hitch Ball Mount	
Chrome Hitch Ball, 2"	
Reducer Bushing	

KAWASAKI GENUINE ACCESSORIES PACKAGES

Kawasaki has Accessory Packages available as single part numbers and one value price for the MULE PRO-MX, delivered complete to dealerships. When purchased with the vehicle, extended warranty terms - the same length as the vehicle - on the accessories apply.

Open Range Package

MULE PRO-MX

OPEN RANGE PACKAGE	P/N 99969-3751

DESCRIPTION
KQR™ Full Fixed Windshield - Polycarbonate
LED Light Bar
LED Light Bar Harness Kit
Accessory Wire Harness
Brush Guard (with headlight guards)
Tail Light Guards
Seat Covers
Floor Mats
KQR™ Cargo Box
KQR™ Accessories Mount (qty 2)
Trailer Hitch Ball Mount
Chrome Hitch Ball, 2"
Reducer Bushing

KAWASAKI GENUINE ACCESSORIES PACKAGES

Kawasaki has Accessory Packages available as single part numbers and one value price for the MULE PRO-MX, delivered complete to dealerships. When purchased with the vehicle, extended warranty terms - the same length as the vehicle - on the accessories apply.

Adventure Package

LE MODEL SHOWN

ADVENTURE PACKAGE	P/N 99969-3752

DESCRIPTION
Half Windshield
Brush Guard (with headlight guards)
Rear Bumper
CV Guards - Front & Rear
Skid Plate - Front, Mid, Rear
Tail Light Guards
Rear View Mirror
WARN® ProVantage™ 3500 Winch

*WARN®, the WARN logo and THE RED HOOK STRAP are registered trademarks of Warn Industries, Inc. ProVantage™ are trademarks of Warn Industries, Inc. “Kolpin” and “Gun Boot” are registered trademarks of Kopin Outdoors, inc.

KAWASAKI GENUINE ACCESSORIES PACKAGES

Kawasaki has Accessory Packages available as single part numbers and one value price for the MULE PRO-MX, delivered complete to dealerships. When purchased with the vehicle, extended warranty terms - the same length as the vehicle - on the accessories apply.

Sportsman Package

SPORTSMAN PACKAGE	P/N 99969-3753
DESCRIPTION	
KQR™ Full Fixed Windshield - Polycarbonate	
Soft Cab Roof	
Soft Cab Enclosure Back	
Soft Cab Enclosure Upper Doors	
Seat Cover (Camo)	
ATV TEK Gun Boot	
Camo Gun Boot Cover	
KQR™ Gun Boot Mount	
KQR™ Accessories Mount (qty. 2)	

* ™/®& ©2018 TrueTimber Outdoors Holding Company, LLC. Manufactured and/or distributed under official license by Kawasaki Motors Corp., U.S.A.

KAWASAKI GENUINE ACCESSORIES PACKAGES

Kawasaki has Accessory Packages available as single part numbers and one value price for the MULE PRO-MX, delivered complete to dealerships. When purchased with the vehicle, extended warranty terms - the same length as the vehicle - on the accessories apply.

Enclosed Cab Package, Soft

MULE PRO-MX

ENCLOSED CAB PACKAGE, SOFT	P/N 99969-3754

DESCRIPTION
KQR™ Full Fixed Windshield - Polycarbonate
Soft Cab Roof
Soft Cab Enclosure Back
Soft Cab Enclosure Upper Doors
Rear View Mirror

KAWASAKI GENUINE ACCESSORIES PACKAGES

Kawasaki has Accessory Packages available as single part numbers and one value price for the MULE PRO-MX, delivered complete to dealerships. When purchased with the vehicle, extended warranty terms - the same length as the vehicle - on the accessories apply.

Enclosed Cab Package, Hard

MULE PRO-MX

ENCLOSED CAB PACKAGE, HARD	P/N 99969-3755

DESCRIPTION
KQR™ Full Windshield - Glass
Windshield Wiper Kit
Windshield Washer Kit
KQR™ Rear Panel - Polycarbonate
Hard Cab Enclosure Doors
HD Springs
Rear View Mirror

KAWASAKI GENUINE ACCESSORIES

See the current applicable Kawasaki accessory catalog or visit www.kawasaki.com for all of the latest Kawasaki Genuine Accessories available for this model.

Steel Roof	HTC Green
Plastic Roof	Brush Guard
Door Set	Rear Bumper
KQR™ Rear Panel, Polycarbonate	Tail Light Guard Set
KQR™ Full Windshield, Glass	Skid Plate Set
KQR™ Full Fixed Windshield, Polycarbonate	CV Joint Guard Set, Front & Rear
Heater	Winch Mount Kit
LED Dome Light	Plow Mount Plate
Accessory Wire Harness	Plow Frame
Dome Light	Plow Blade, 72”
Audio System	Heavy Duty Spring Set
Windshield Washer	LED Light Bar
Windshield Wiper	LED Light Bar Harness Kit
Headrest	Beacon Strobe Light
Headrest Bracket	Cargo Light
Floor Mat Set	Cargo Light Harness & Bracket Kit
Seat Cover, Black	Cargo Bed Lift
Seat Cover, TrueTimber® HTC Green	Cargo Bed Mat
Horn	KQR™ Cargo Box
Back-Up Beeper	KQR™ Accessories Mount
Rearview Mirror	KQR™ Cargo Bed Extender/Divider
Premium Side Mirror Set	Kawasaki Gun Defender
Standard Side Mirror Set	KQR™ Gun Mount
KQR™ Full Windshield, Glass	Kawasaki Gun Defender Cover, TrueTimber® HTC
KQR™ Full Fixed Windshield, Polycarbonate	Green
Half Windshield, Plastic	2’ Hitch Drawbar, 4” Drop
Soft Cab Enclosure Roof, Black	Chrome Hitch Ball, 2”
Soft Cab Enclosure Back, Black	Chrome Hitch Ball, 1 7/8”
Soft Cab Enclosure, Upper Door Set, Black	Hitch Pin, 5/8”
Soft Cab Enclosure Roof, TrueTimber® HTC Green	Reducer Bushing
Soft Cab Enclosure Back, TrueTimber® HTC Green	Storage Cover, TrueTimber® HTC Green
Soft Cab Enclosure, Upper Door Set, TrueTimber®	Storage Cover, Black

*WARN®, the WARN logo and THE RED HOOK STRAP are registered trademarks of Warn Industries, Inc. ProVantage™ are trademarks of Warn Industries, Inc. “Kolpin” and “Gun Boot” are registered trademarks of Kopin Outdoors, inc.

Kawasaki
GENUINE ACCESSORIES

FUEL INJECTION SYSTEM

Features:

An on-board, digital microprocessor reads various inputs from the engine, like ignition timing, rpm, and throttle position, and from the environment, like air temperature and pressure. It uses the information to decide the precise amount of fuel that the engine needs at that moment, and injects it into the intake tract.

Benefits:

The fuel injection system feeds the engine just the right amount of fuel it needs, when it needs it. No extra fuel is wasted, nor is the engine forced to run too lean. The result is excellent fuel economy, combined with power and torque when the rider demands it. The engine runs smoothly and powerfully from idle to top speed.

DUAL-MODE DIFFERENTIAL

Features:

Dual-mode differentials in the unlocked mode allow the drive wheels to revolve at different speeds. This can eliminate wheel slippage under certain conditions. Locking dogs are machined into the outside of the differential gear. Shifting a coupling into engagement with the locking dogs causes the differential to lock and work like a solid axle. In the locked mode, the left and right drive wheels now turn at the same speed, increasing traction.

Benefits:

The locking differential lets the operator choose the mode of operation: unlocked so the soil or grass is not disturbed preserving the environment, or locked for increased traction for rough terrain or pulling a trailer.

ELECTRIC POWER STEERING (EPS)

Features:

There are three basic components of the EPS system; a power-assist unit on the steering shaft assembly, an ECU and speed sensor.

Vehicle speed is calculated by the ECU using signals from the speed sensor. Once the ECU makes its calculations, it controls the amount and direction of current supplied to the power assist unit's reversible motor. The motor runs a worm gear that turns a larger drive gear, which is made of a plastic composite to reduce mechanical shock and operational noise in the actuator.

Within the actuator the input shaft from the steering wheel and output shaft to the steering gear assembly are connected by a torsion bar that allows the shafts to rotate at different rates, depending on the amount of torque applied to the input shaft or rotational force on the output shaft generated by the steering assembly. The input shaft passes through the torque sensor and as the input/output shafts rotate, the torsional twist between the shafts move the sensor's rotor up or down. This changes the magnetic field acting on the right and left turn coils. The ECU senses this change of voltage on the coils and adjusts the amount of current to the motor.

Benefits:

The power assisted steering reduces steering effort to ease driver fatigue, especially when the four-wheel drive mode is engaged. Since the EPS is a variable-assist system it provides increased assistance at low speeds, where it's needed most, while reducing the assistance at higher vehicle speeds. The electric motor's inertia also significantly reduces bump steer and kickback to the steering wheel caused by shocks to the wheels for a more comfortable and controlled ride.

CONTINUOUSLY VARIABLE TRANSMISSION (CVT)

Features:

An automatic transmission system featuring a torque converter that has two variable-diameter pulleys. A large V-belt transmits power from the crankshaft mounted pulley to the pulley on the transmission input shaft. The crankshaft pulley increases in diameter as engine RPM increases applying more load to the engine. The input shaft pulley decreases in diameter as the torque required to turn the drive wheels decreases.

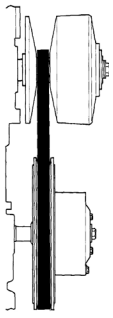

Benefits

The CVT eliminates shifting and automatically keeps the engine in the most efficient range for any selected vehicle speed, load or terrain, making the vehicle easy to operate.